CFS INDUCTION LIGHTING SPECIALISTS

http://www.cfsinc.us

CFS-ZY FLOOD SERIES 70~100 Watts

Ordering Info	
70W	CFS-ZY-100E-ST70W
80W	CFS-ZY-100E-ST80W
100W	CFS-ZY-100E-ST100W

Features:
*Die cast aluminum housing with black powder coated finish corrosion-resistance.
*Anodized aluminum reflector and clear tempered glass lens are designed to optimize light distribution.
*Gas-tight silicon rubber seal made for wet locations.

Lamps and ballasts:
*70~100W square loop type induction lamp with high lighting efficacy at rated 80,000hrs lifetime, about 20 years burning on 4000hrs/year.
*Electronic ballast features high power factor (>0.95), flickering free, constant output wattage, and safe protection.

Ambient temperature for lighting fixture:
*-20C~40C.

Applications:
*Billboards, buildings, parks, pools, parking lots, plazas, tennis courts.

Induction lighting Features

No electrodes or filaments

*100,000 hrs rated average life.
*Low lumen depreciation of <30% @ 60,000 hours.
*Low operating temperature of components.

High-frequency operation

*High system efficacy(65-70lm/W)
*No flickering
*No stroboscopic effect
*No noise

Electronic control

*Output-protected HF generator

Instant (re-)start

*Light available instantly when needed
*Short ignition time <0.5sec

3-line fluorescent coating

*Choice of color temperature
*White light
*Excellent color rendition (CRI 85)
*No color deviation

Induction Lighting Benefits

*High reliability and virtually maintenance-free operation.
*Lasting light output right through life time.
*Increased safety, more standard luminaire construction.
*Economic, environment-friendly lighting in situations with long burning hours.
*Restful non-fatiguing light.
*No danger with rotating machinery.
*Non-disturbing in operations.
*Automatic switch-off in case of lamp or power coupler failure.
*Generator resets 15-30 seconds after switch off.
*Suitable for security and safety lighting.
*More comfort.
*Useful light immediately after switch-on.
*Installation can be matched to lighting situations and requirements.
*Uniform predictable lighting results throughout larger installations; color maintained through life.

c UL us LISTED

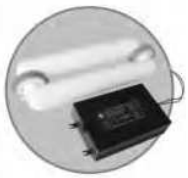

All CFS Inc. products come with a 5 year warranty.

CFS INC.
3 Adams Street- Belvidere, NJ 07823– Tel: 908-475-8991 Fax: 973-729-1271
E-mail: info@cfsinc.us Web Site: www.cfsinc.us

CFS-ZY FLOOD SERIES 70/80/100 Watt Photometrics

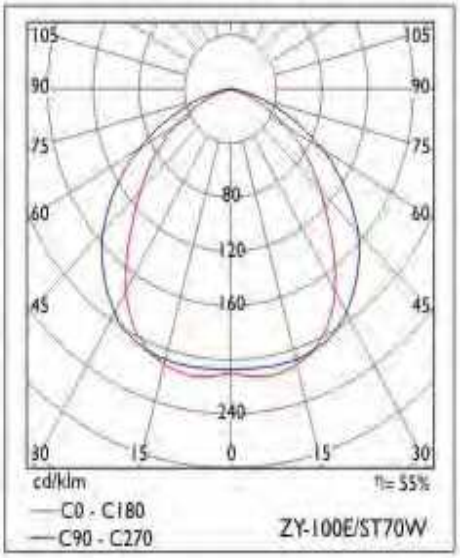

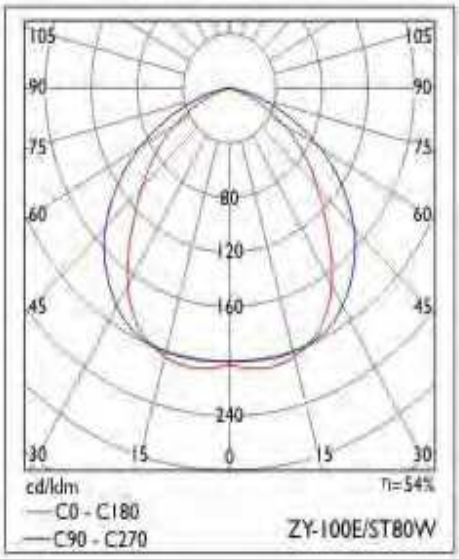

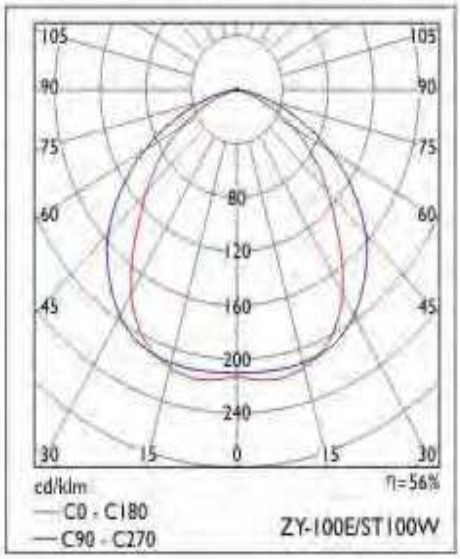
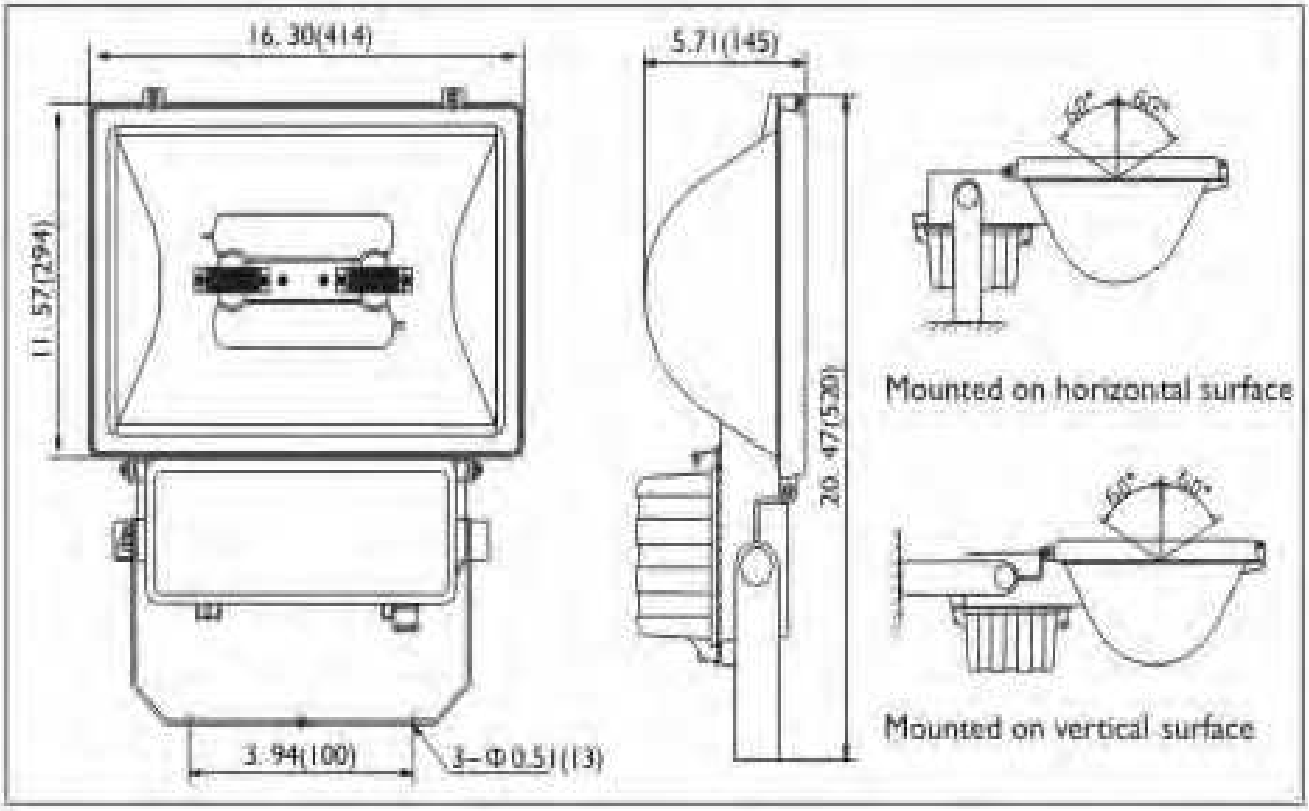
Dimensions